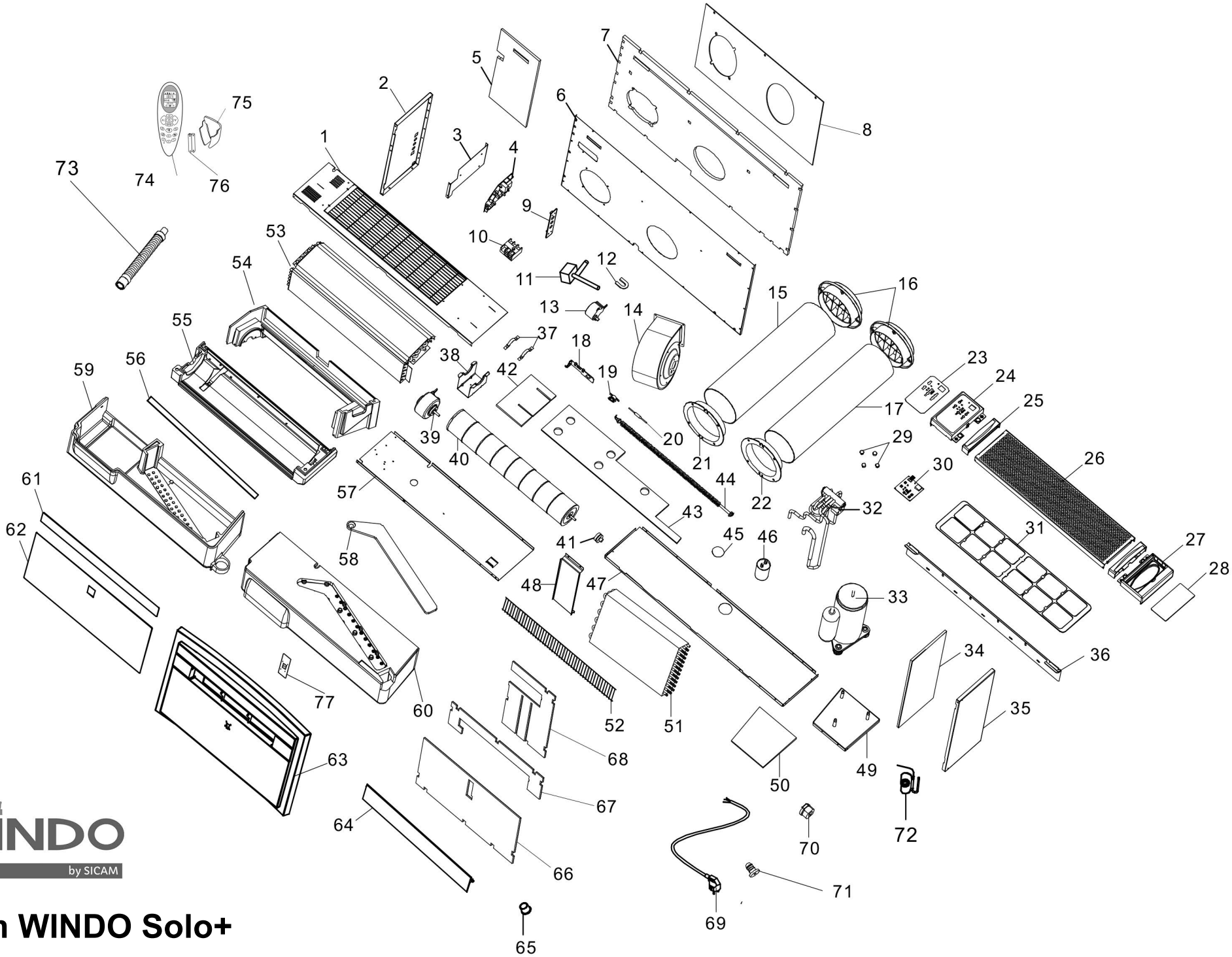

WINDO by SICAM

Clim WINDO Solo+

WINDO by SICAM

Clim WINDO Solo+ - Liste des pièces

Item	BOM Code	Description	Qty	Item	BOM Code	Description	Qty
1	R122160373	Top cover assy.	1	40	R128050017	Tangential fan	1
2	R127040646	Left cover	1	41	R139050004	Axletree seat	1
3	R127030204	Fixture for PCB	1	42	R138140572	Top cover insulation material	1
4	R131010493	PCB EC	1	43	R138140566	Basic pan insulation material	1
5	R138140570	Back insulation material(comp side)	1	44	R131190062	Electrical heater assy.	1
6	R127020524	Back cover	1	45	R138140573	Compressor capacitor insulation material	1
7	R138140568	Back insulation material(outside)	1	46	R131160007	Capacitor for compressor	1
8	R138140569	Back insulation material(inside)	1	47	R140140068	Basic pan	1
9	R128060314	Fresh air window	1	48	R127020536	Link plate	1
10	R131030006	Terminal	1	49	R127020641	Compressor mounting sheet	1
11	R8401101	By pass valve	1	50	R138140567	Compressor bottom insulation material	1
12	R128040313	Inside cable plastic ring	3	51	R121050205	Condenser assy.	1
13	R131060051	Step motor	1	52	R127020373	Air outlet grill	1
14	R131050083	Condenser EC fan motor	1	53	R121010203	Evaporator assy.	1
15	R128060347	15 PP air inlet tube	1	54	R128060392	Evaporator top EPP	1
16	R128030437	Rub cup grill	2	55	R128060393	Evaporator down EPP	1
17	R128060348	PP Air outlet tube	1	56	R138140395	Evaporator insulation material	1
18	R127020528	Electrical heater bracket	1	57	R127020558	Partition	1
19	R131080033	Termostat	1	58	R128060391	Condenser top EPP closer	1
20	R131190064	Fuse	1	59	R128060390	Condenser lower EPP	1
21	R128060394	O-ring for air inlet pipe	1	60	R128060389	Condenser top EPP	1
22	R128060395	O-ring for air outlet pipe	1	61	R128030435	Upper Acrylic panel	1
23	R128040312	On board control box film	1	62	R128030436	Down Acrylic panel	1
24	R128040310	On board control box	1	63	R128030455	Front panel	1
25	R128060387	Handle	2	64	R128030456	Flap panel	1
26	R127040631	Air inlet grille	1	65	R128030286	Axis sleeve	1
27	R128040324	Remote control box	1	66	R138140681	Front panel bottom insulation material	1
28	R128040326	Remote control box cover	1	67	R138140382	Front panel top insulation material	1
29	R137010073	Rubber support	4	68	R138140565	Front panel insulation material 3	1
30	R131190061	On board control PCB	1	69	R132040216	Power cable	1
31	R128020483	Filter	1	70	R139010035	Cable plastic ring	1
32	R122120274	Reversing valve and tubes assy.	1	71	R139010076	Stopple	2
33	R133020062	Compressor assy.	1	72	R122060132	Capillary assy.	1
34	R138140571	Right cover insulation material	1	73	R128070006	Drain part	1
35	R127040629	Right cover	1	74	R131170148	Remote control	1
36	R127080054	Mounting sheet	1	75	R128040261	Remote control seat	1
37	R127020534	Indoor motor cover	1	76	R131100001	Battery	2
38	R127020643	Indoor EC motor bracket	1	77	R131020097	LED display PCB	1
39	R131040170	Indoor EC motor	1				